BT Module

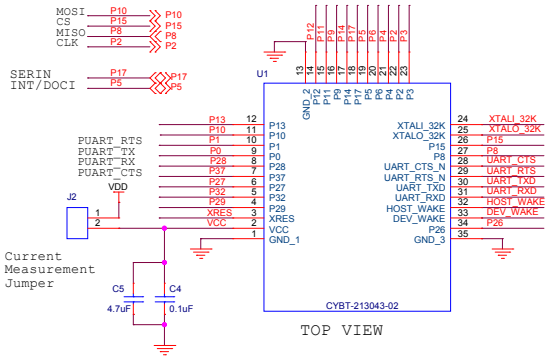

TOP VIEW

32K Cyrstal

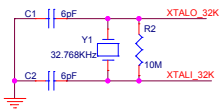

Reset

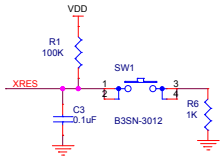

RGB LED

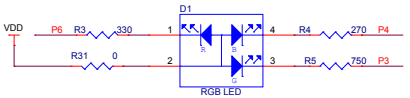

Recover

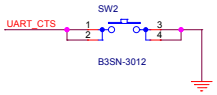

User

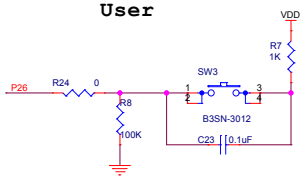

USB to Serial

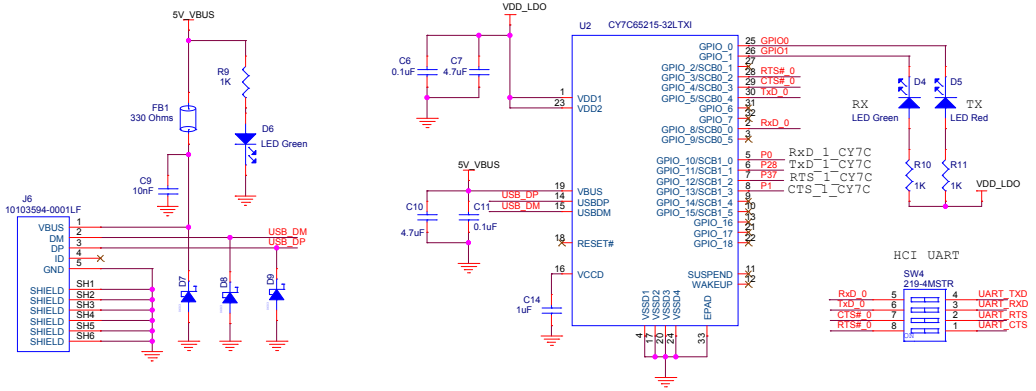

HCI UART Connector

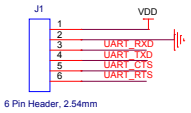

SW4 should be OFF when using J1

Thermistor

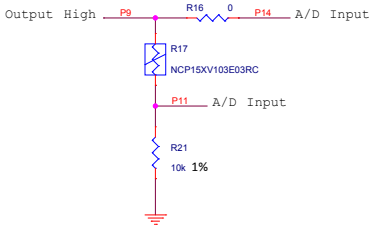

Ambient Light Sensor

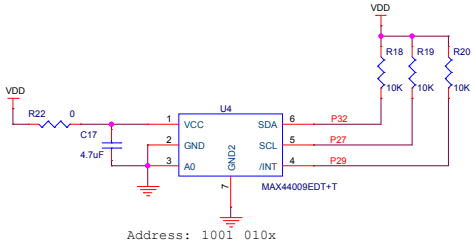

Address: 1001 010x

Additional Connector

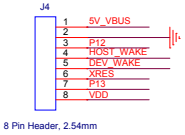

Cypress Semiconductor		
Title: CYBT-213043-MESH		
Size: C	Document Number: 630-20126-01	Rev: 1.0
Date: Monday, January 14, 2019	Sheet 1 of 2	

PIR Sensor

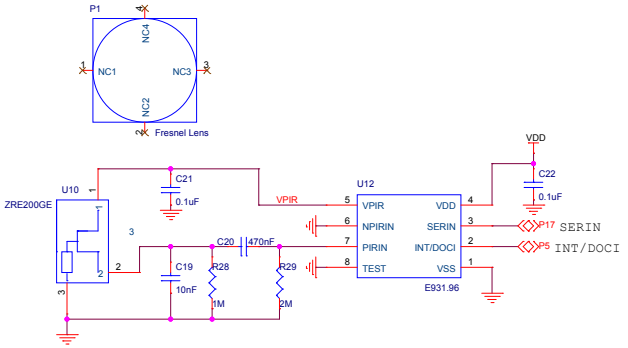

Serial Flash

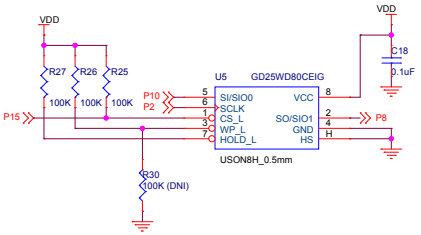

POWER

CR2032 Coin Cell
Battery Holder

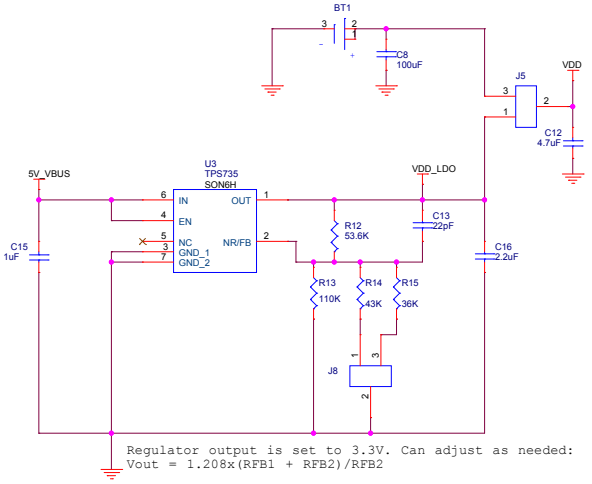

JUMPER SETTING	Power Source
SHORT 1 & 2	USB Powered
SHORT 2 & 3	CR2032 Powered

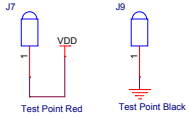

Regulator output is set to 3.3V. Can adjust as needed:
Vout = 1.208x(RFB1 + RFB2)/RFB2

TABLE: VOLTAGE SELECTION JUMPER SETTINGS

JUMPER SETTING	O/P VOLTAGE
SHORT 1 & 2	3.3V
SHORT 2 & 3	3.6V
REMOVE JUMPER	1.8V

Four Bumpers On Bottom of Board



Cypress Semiconductor		
Title: CYBT-213043-MESH		
Size: C	Document Number: 630-20126-01	Rev: 1.0
Date: Monday, December 17, 2018	Sheet 2 of 2	